ECE 1101L: Lab 7 – Maximum Power Transfer

Introduction: For this lab our goal was to determine what conditions must be in place to see if a load will produce maximum power. The theory states that to reach maximum load, the load resistance must equal the internal resistance of the source. As the resistance load increases our load voltage increases which means the load current will drop. It is important to note that we used 22k resistors instead of 25k, 2.2k resistors instead of 2.7k, and 3.0k resistors instead of 3.3k.

Circuit

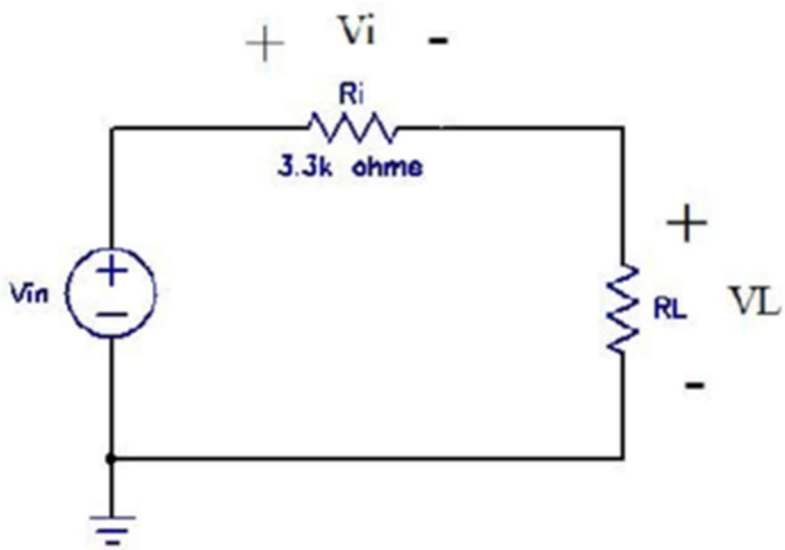

Measured:

RL - actual (Ω)	VL (V)	PL (W)	PT (W)	η (%)	Vin (V)	Ri (Ω)
47	0.07887	0.000132364	0.008204792	1.6132524	5	3000
150	0.24036	0.000385153	0.007936508	4.852926086	5	3000
470	0.68934	0.001011042	0.007204611	14.03325988	5	3000
1000	1.26126	0.001590777	0.00625	25.4524286	5	3000
2200	2.142	0.002085529	0.004807692	43.37900509	5	3000
2934.5	2.5041	0.002136826	0.004212655	50.72398297	5	3000
3900	2.8412	0.002069851	0.003623188	57.12787727	5	3000
10,000	3.8544	0.00148564	0.001923077	77.25327667	5	3000
22,000	4.4055	0.000882201	0.001	88.2201375	5	3000
75,000	4.804	0.000307712	0.000320513	96.00621056	5	3000
100,000	4.8484	0.00023507	0.000242718	96.84876815	5	3000

Theoretical:

RL – actual (Ω)	VL	PL	PT	η	Vin	Ri
47	0.077125041	0.000126559	0.008204792	1.54250082	5	3000
150	0.238095238	0.000377929	0.007936508	4.761904762	5	3000
470	0.677233429	0.000975841	0.007204611	13.54466859	5	3000
1000	1.25	0.0015625	0.00625	25	5	3000
2200	2.115384615	0.002034024	0.004807692	42.30769231	5	3000
2934.5	2.472407111	0.00208308	0.004212655	49.44814222	5	3000
3900	2.826086957	0.002047889	0.003623188	56.52173913	5	3000
10,000	3.846153846	0.00147929	0.001923077	76.92307692	5	3000
22,000	4.4	0.00088	0.001	88	5	3000
75,000	4.807692308	0.000308185	0.000320513	96.15384615	5	3000
100,000	4.854368932	0.000235649	0.000242718	97.08737864	5	3000

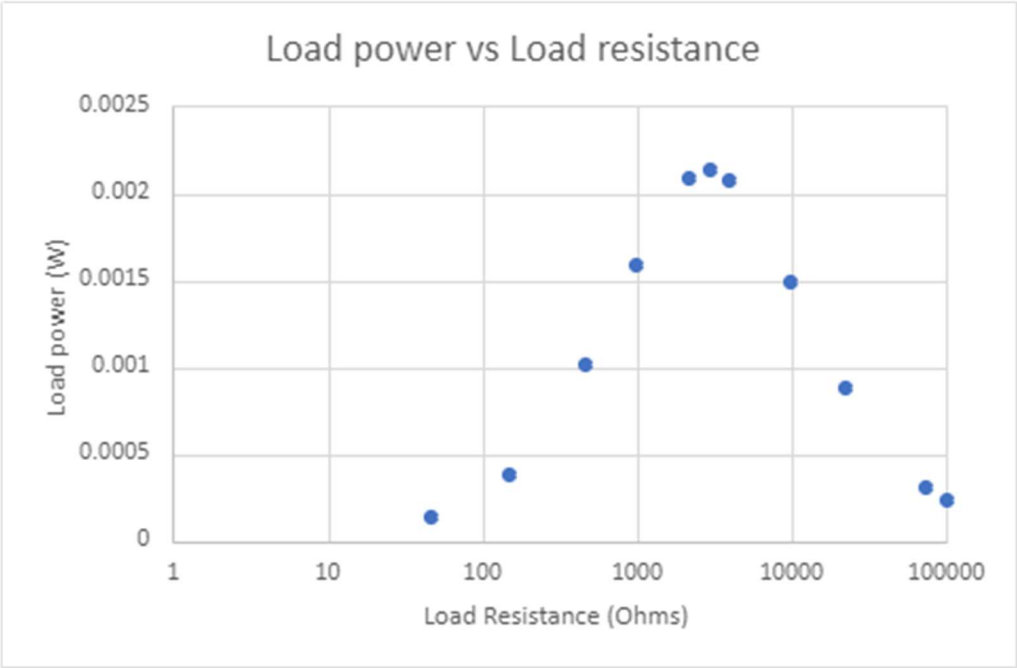

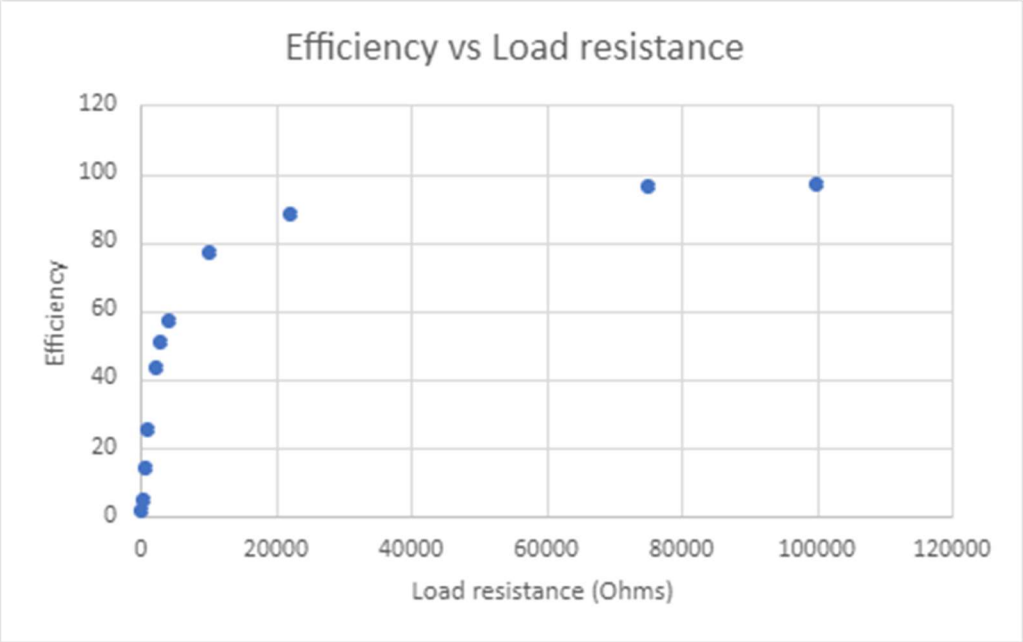

Explanation: In this circuit we had our power supply set at 5 volts. We had Ri as 3k instead of 3.3k and 11 different values for Rl ranging from 47 ohms to 100k ohms. We first did our theoretical calculations using the equations for load voltage, load power, total power, and efficiency. After we measured our load voltage on the physical circuit and used those values to calculate the rest. Lastly, we plotted two graphs, one comparing load power vs load resistance, and one comparing efficiency vs load resistance.

Conclusion: Overall, our lab went well. We were able to confirm the maximum power transfer by increasing our resistance values and comparing the different load values. Our first graph shows that there is a peak in load power compared to resistance before it starts declining. Our second graph shows that as the load resistance increases so does the efficiency, but it balances out in the top end. In conclusion, this lab went extremely well and we were able to confirm our theoretical values.